# FCTD-009-09-15

MOUSE FILTER

| REV | DATE |
|---|---|
| | |

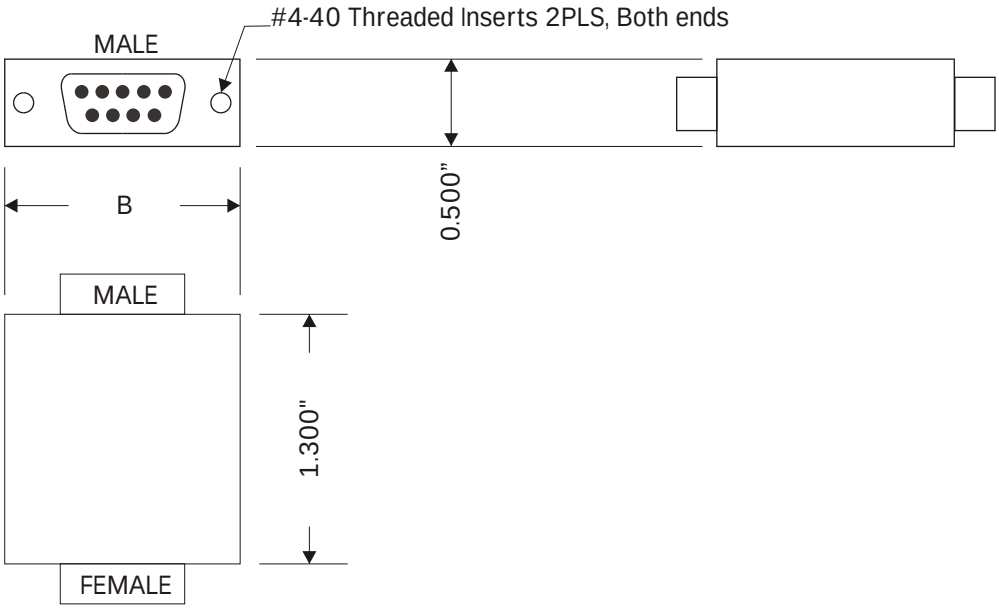


SOLDER CUP VERSIONS AVAILABLE

## OUTLINE DRAWING

| | |
|---|---|
| HIGH SPEED TTL FILTER | DFSDFSDFSD |
| SOURCE IMPEDANCE: | 10 TO 100 OHMS. 50 TYP. |
| LOAD IMPEDANCE: | 1 K OHMS MIN. 2.2 K TYP. |
| RISE / TIME: | 1.2 µs, 1.5 µs MAX. |
| DATA RATE: | 500 Kbps MAX. |
| CLOCK RATE: | 250 Kbps MAX. |
| OVERSHOOT: | 12% MAX |
| UNDERSHOOT: | 6% |
| VOLTAGE: | + / - 50 V DC |
| PASS BAND I.L.: | 0.6dB TYP. 1.7 dB MAX. |
| LOW CURRENT POWER SUPPLY FILTER | |
| SOURCE & LOAD IMP. | 50 OHMS |
| VOLTAGE: | +10 V / -0.5 V |
| CURRENT: | 30 mA |
| SERIES RESISTANCE: | 3.3 OHMS MAX |

| | Frequency | Attenuation |
|---|---|---|
| HIGH SPEED TTL | 200 KHz | 1 dB MAX |
| | 730 KHz | 20 dB |
| | 1.8 MHz | 40 dB |
| | 5 MHz to 1 GHz | 55 dB TYP. |
| POWER SUPPLY FILTER | 17 KHz | 10 dB TYP. |
| | 28 KHz | 30 dB TYP. |
| | 38 KHz | 40 dB TYP. |
| | 55 KHz | 50 dB TYP. |
| | 95 KHz to 1 GHz | 55 dB TYP. |

## SPECIFICATIONS

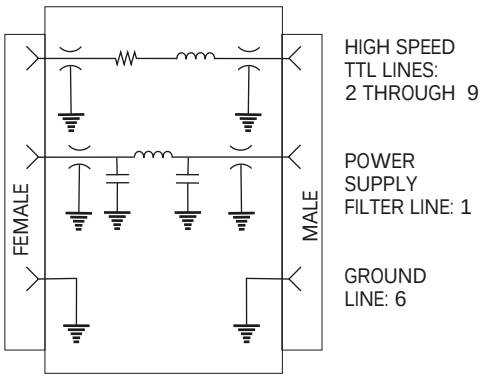


## FUNCTIONAL DIAGRAM


EMICON CORPORATION

info@emiconcorp.com
sales@emiconcorp.com
www.emiconcorp.com

900 Loma Verde - Suite A
El Paso, TX 79936

Tel. (915) 590-0795
Fax (915) 591-1404